LOWARA
a xylem brand

ecocirc XL 32-100 F

E503060AA

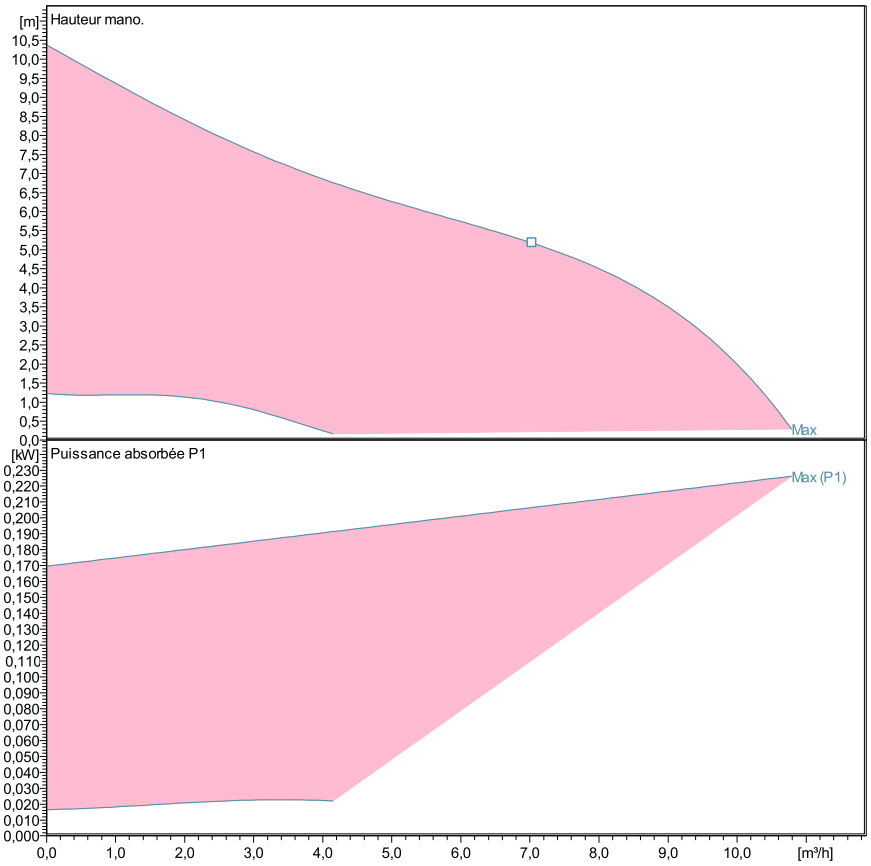

Performances selon norme ISO 9906 - Annexe A

Informations valables pour:

Eau, claire [100%] ; 4°C; 1000kg/m³; 1,57mm²/s

Liquid temperature:

-10°C (14°F) to +110 °C (230°F) for heating pumps

-10°C (14°F) to +85 °C (185°F) for domestic hot water pumps

Caractéristiques pompe

Fabricant	Lowara
Port to port (mm)	220
Electrical connection	Terminals
Specific EEI	<= 0,23
Nominal pressure	PN 6/10
Connection	A bride / DN 32

Electrical data

Rated voltage	230 V
Fréquence	50 / 60
Protection class	IP 44
Classe d'isolation	F
Digital input	Contact load: 5V, 10 mA
Digital output	Vmax < 250 VAC / Imax < 2 A
Analog input	0-10 V / 4-20 mA
Courant de fuite	< 3.5 mA
Communication capabilities	No communication protocol
Niveau sonore	<= 45 dB(A)
Dimensioning current	1,7 A

Materials

Bush Bearing	Carbone impregné de résine	Roue	PPS
Thrust bearing	Oxide d'aluminum	Wear ring	Acier inox
Bearing plate	Acier inox	Rotor can	Acier inox
Motor housing	Aluminum	Arbre	Acier inox
O-rings	EPDM	Control box	Poly carbonate
Pump housing	EN-GJL		

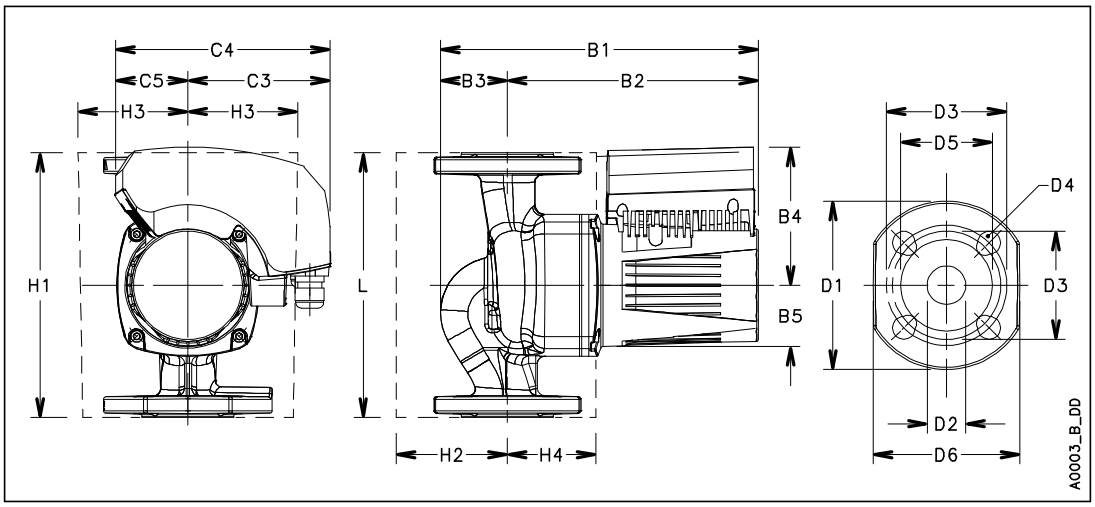

Dimensions mm

B1	266
B2	208
B3	58
B4	118
B5	51
C3	116
C4	178
C5	62
D1	140
D2	32
D3	90/100
D4	4 x 14/19
D5	76
G	DN 32
Gross Weight	13,3
H1	220
H2	94
H3	96
H4	76
L	220
Net Weight	9,8