ecocirc XL 65-80 F

E503140AA

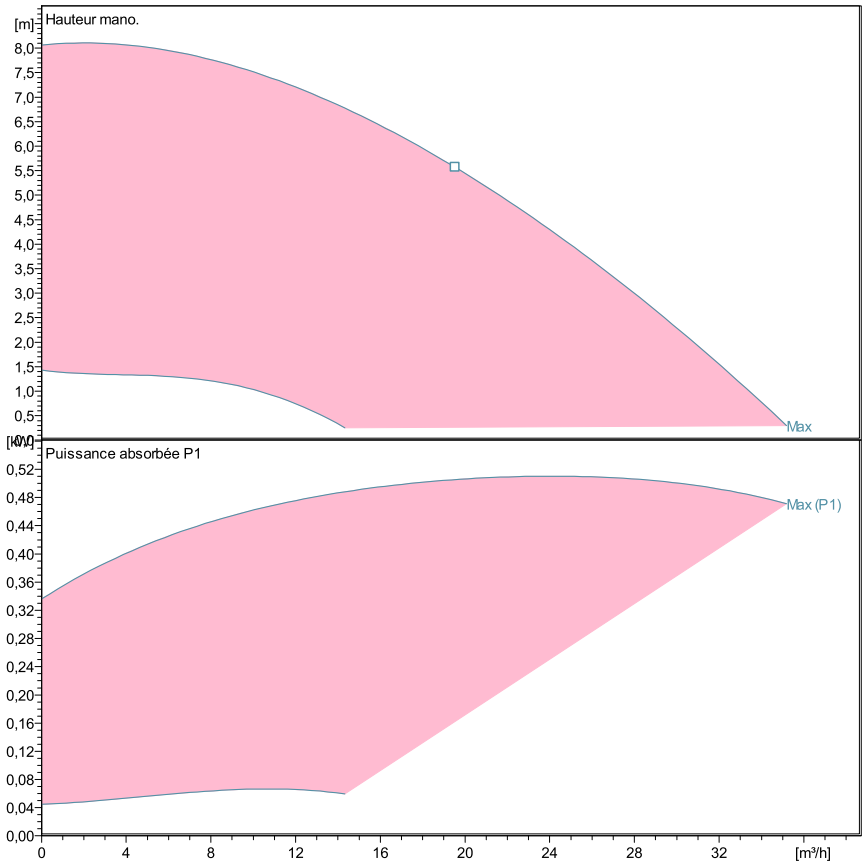

Performances selon norme ISO 9906 - Annexe A

Informations valables pour:

Eau, claire [100%] ; 4°C; 1000kg/m³; 1,57mm²/s

Liquid temperature:

-10°C (14°F) to +110 °C (230°F) for heating pumps

-10°C (14°F) to +85 °C (185°F) for domestic hot water pumps

Caractéristiques pompe

Fabricant	Lowara
Port to port (mm)	340
Electrical connection	Terminals
Specific EEI	<= 0,23
Nominal pressure	PN 6/10
Connection	A bride / DN 65

Electrical data

Rated voltage	230 V
Fréquence	50 / 60
Protection class	IP 44
Classe d'isolation	F
Digital input	Contact load: 5V, 10 mA
Digital output	Vmax < 250 VAC / Imax < 2 A
Analog input	0-10 V / 4-20 mA
Courant de fuite	< 3.5 mA
Communication capabilities	No communication protocol
Niveau sonore	<= 48 dB(A)
Dimensioning current	2,2 A

Materials

Bush Bearing	Carbone impregné de résine	Roue	PPS
Thrust bearing	Oxide d'aluminum	Wear ring	Acier inox
Bearing plate	Acier inox	Rotor can	Acier inox
Motor housing	Aluminum	Arbre	Acier inox
O-rings	EPDM	Control box	Polycarbonate
Pump housing	EN-GJL		

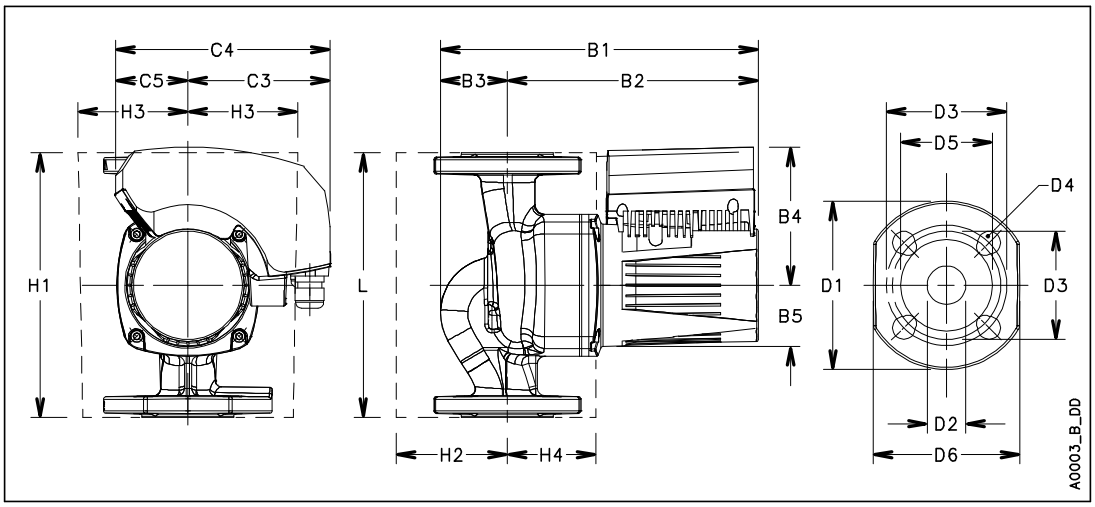

Dimensions mm

B1	364
B2	267
B3	97
B4	132
B5	53
C3	128
C4	206
C5	78
D1	185
D2	65
D3	130/145
D4	4 x 14/19
D5	118
G	DN 65
Gross Weight	24,2
H1	340
H2	112
H3	106
H4	108
L	340
Net Weight	18,9